4. Disassembly and Reassembly

4-1 General Precautions on Disassembly

When you disassemble and reassemble components, you must use extreme caution. The close proximity of cables to moving parts makes proper routing a must. If components are removed, any cables disturbed by the procedure must be restored as close as possible to their original positions. Before removing any component from the machine, note the cable routing that will be affected.

Whenever servicing the machine, you must perform as follows:

1. Remove the paper cassette(s), and the print cartridge. Do not expose the cartridge to direct room light or sun light, and be careful not to scratch the drum surface.

2. Turn the power switch off.

3. Unplug all the cables from the printer.

4. Replace with only an authorized component.

5. Do not force to open or fasten a plastic material component.

6. Be careful no obstacles are included when you reassemble components.

7. When you reassemble components, be careful small size components are located in place.

8. If you turn the machine over to replace some parts, toner or paper particles may contaminate the LSU window. Protect the LSU window with clean paper.

Releasing Plastic Latches

Many of the parts are held in place with plastic latches. The latches break easily; release them carefully. To remove such parts, press the hook end of the latch away from the part to which it is latched.

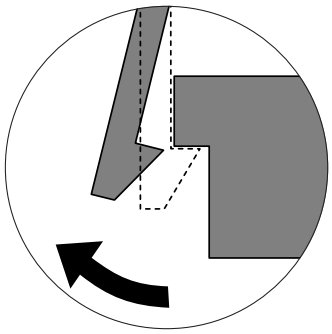

4-2 Transfer Roller

1. Press the cover open switch and raise the printer cover.

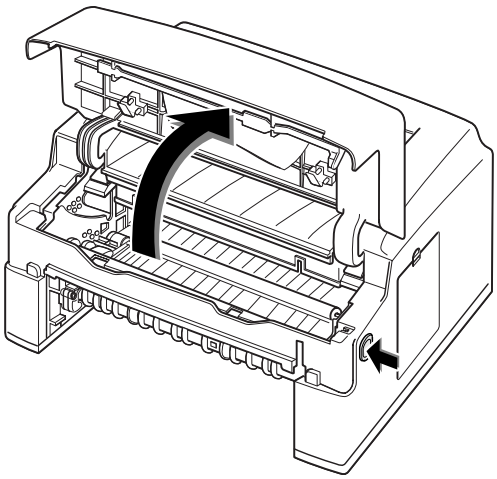

2. Use a phillips screwdriver to release the right end of the roller.

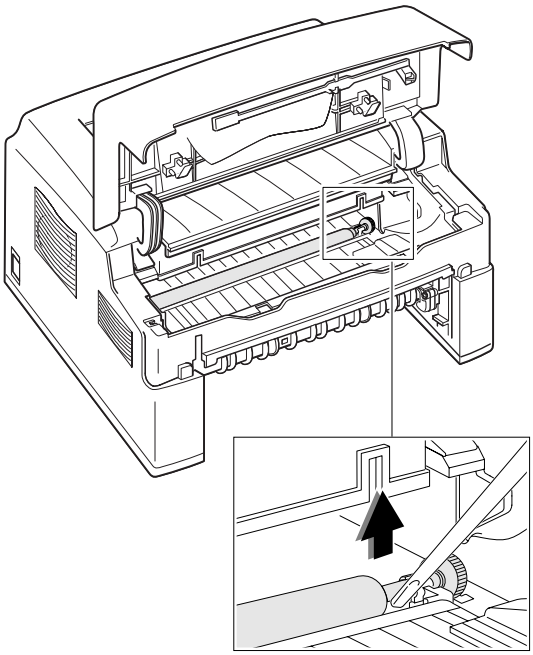

3. Pull the roller slightly to the right to release the left end of the roller, then take it out.

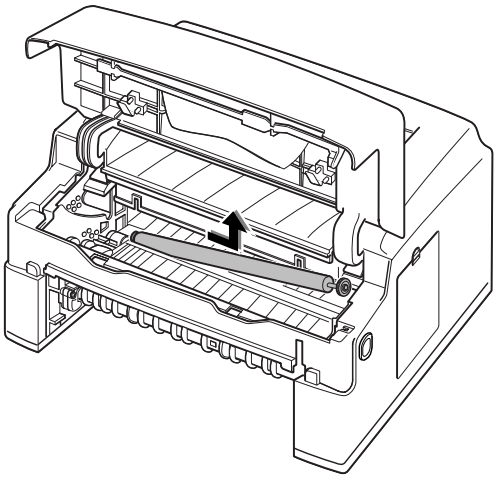

4-3 Controller Board

1. Remove the cover located at the right side of the printer.

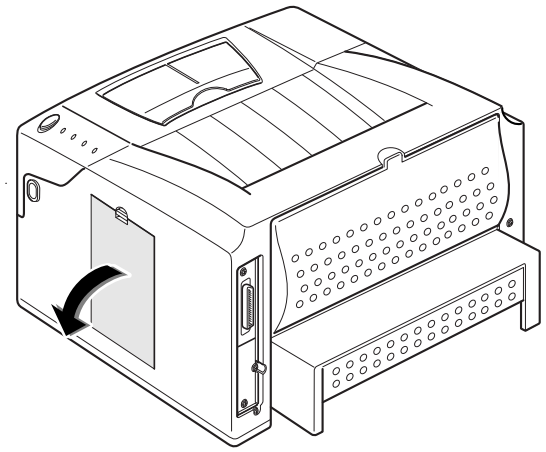

2. Remove one screw. Slide the shield cover in the direction of OPEN arrow marked on the cover, then remove the cover.

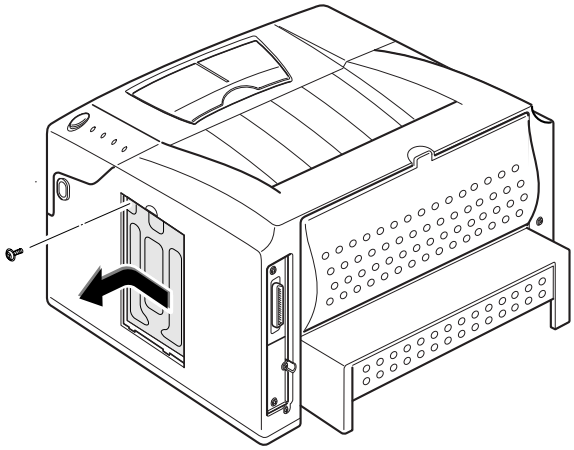

3. Unplug two connectors from the board.

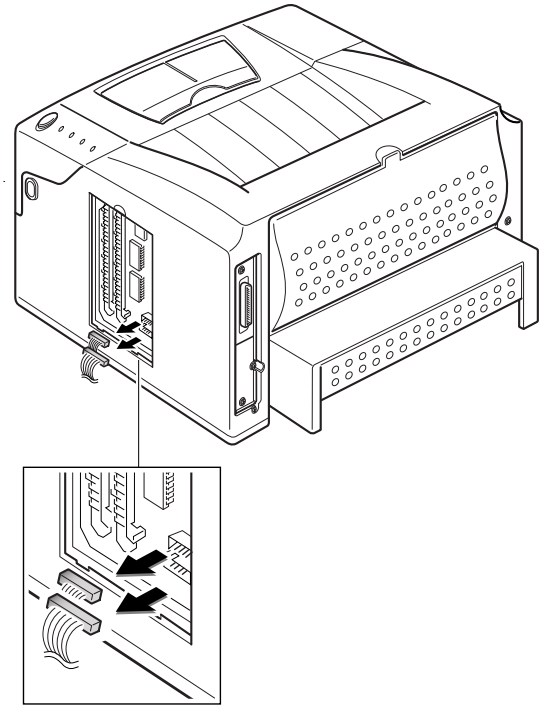

4. Remove three screws securing the board and pull the board out of the printer.

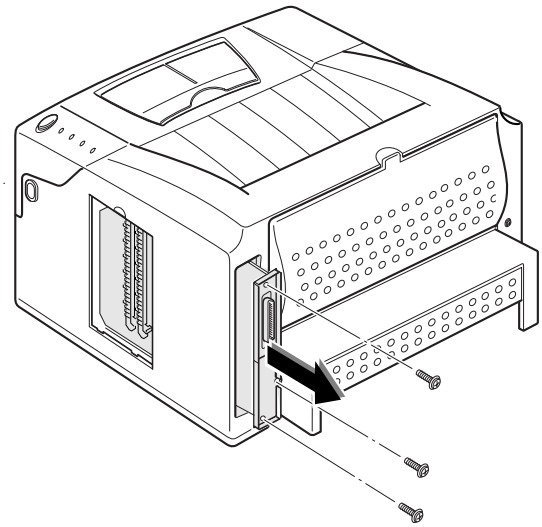

4-4 Panel Board

1 Press the cover open switch and raise the printer cover.

2 Remove the panel cap.

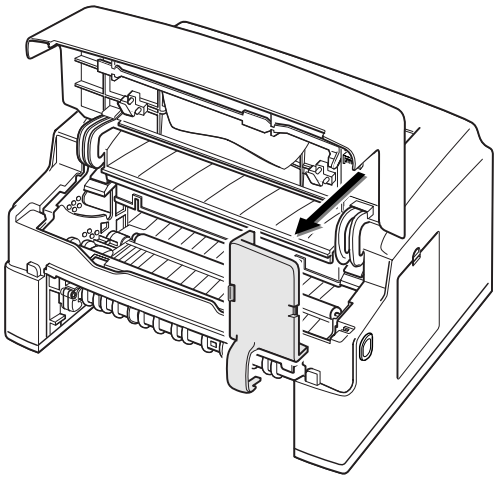

3. Unplug one connector from the panel board.

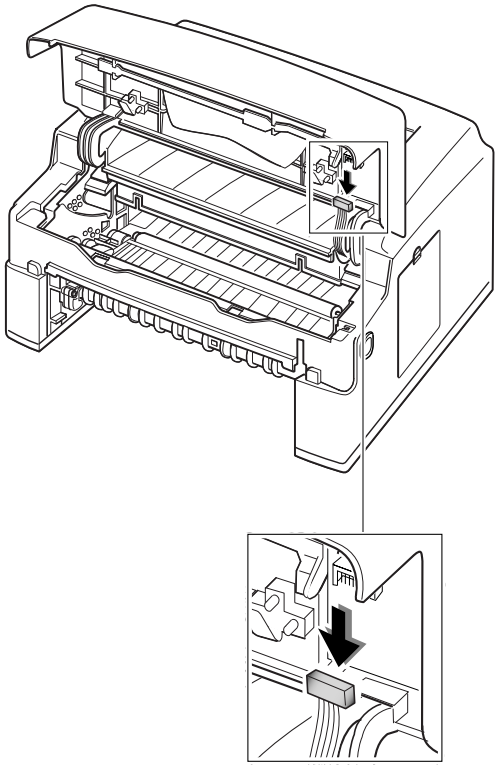

4 Remove three screws from the board, and remove the board.

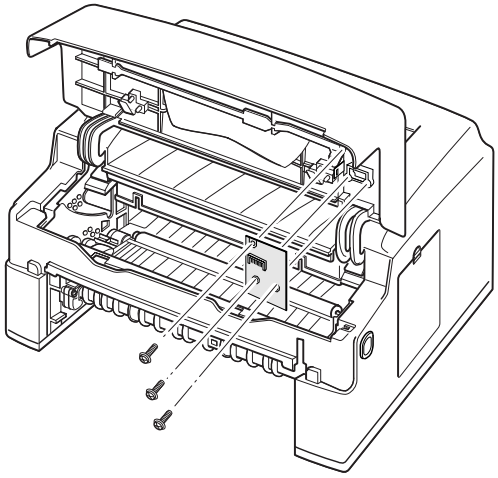

5. Remove the Window LED and button panel LED.

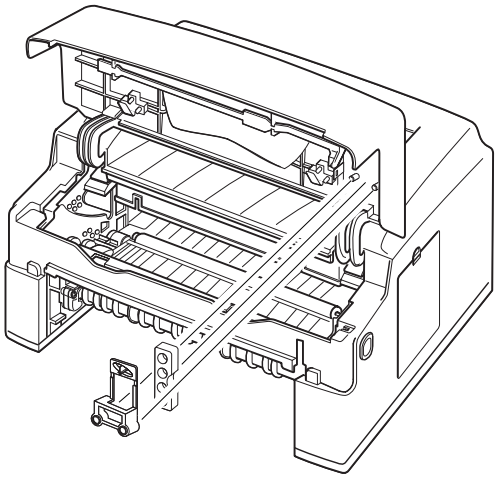

4-5 Pickup Assembly

1. Turn the printer over. Remove three screws from the left base bracket, and take the bracket out.

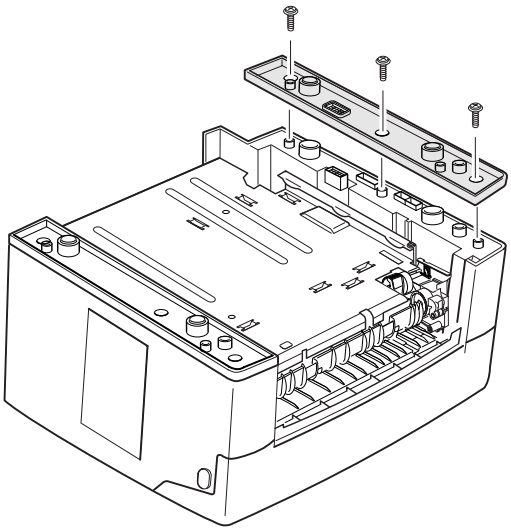

2. Remove one ground screw.

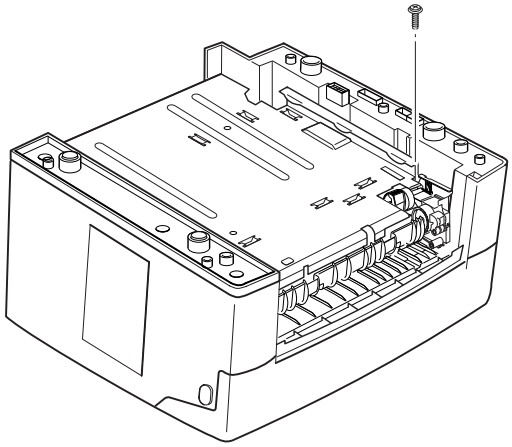

3. Remove two screws securing the pickup assembly and take the assembly out.

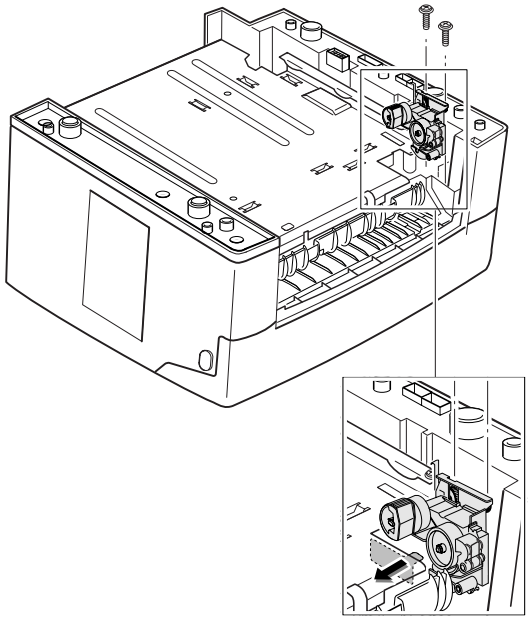

Push the solenoid if you have difficulty to remove the pickup assembly.

4. Check the pickup rubber wear. If the rubber is heavily worn, replace it with a new one.

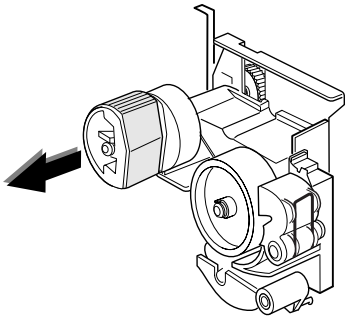

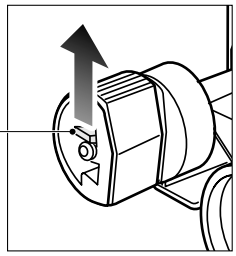

Squeeze this tab to remove the rubber.

4-6 Main Cover

1. Before you remove the cover, you should remove:

   -Controller Board (see page 4-3)

2. Remove two screws at the back of the printer.

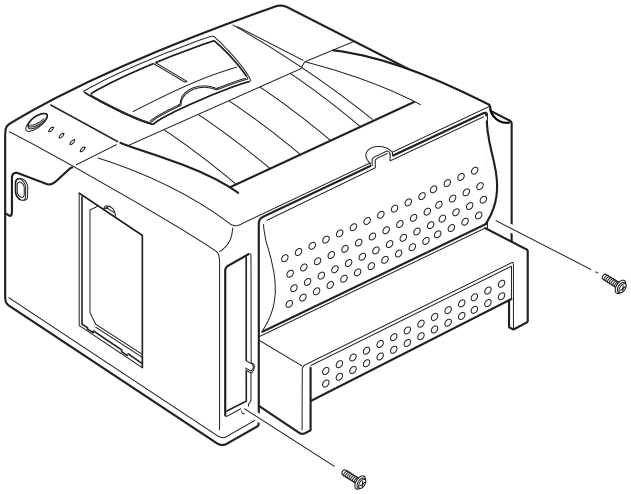

3. Open the printer cover, and remove two screws.

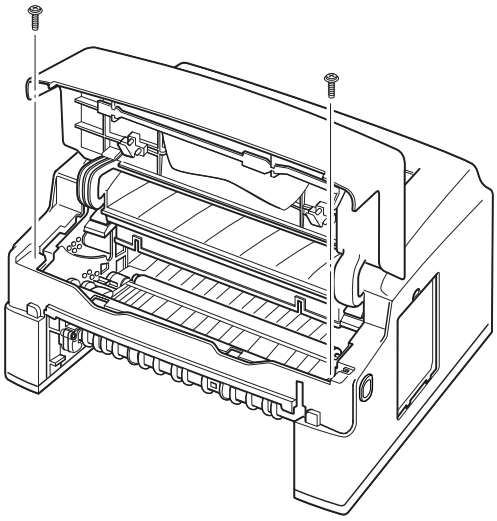

4. Remove the panel cap inside the operator panel.

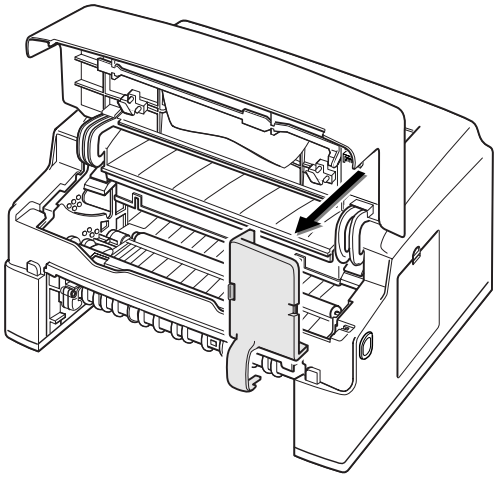

5. Unplug one connector from the panel board.

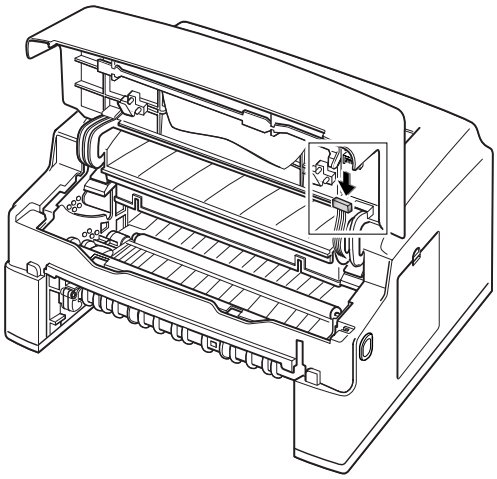

6. Unlatch the front ends of the cover.

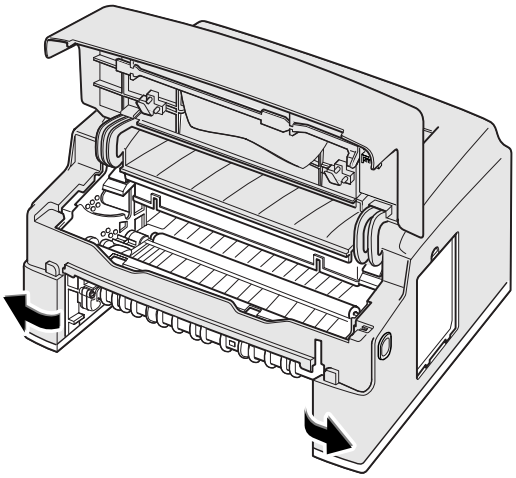

7. Slide the main cover upward, out of printer.

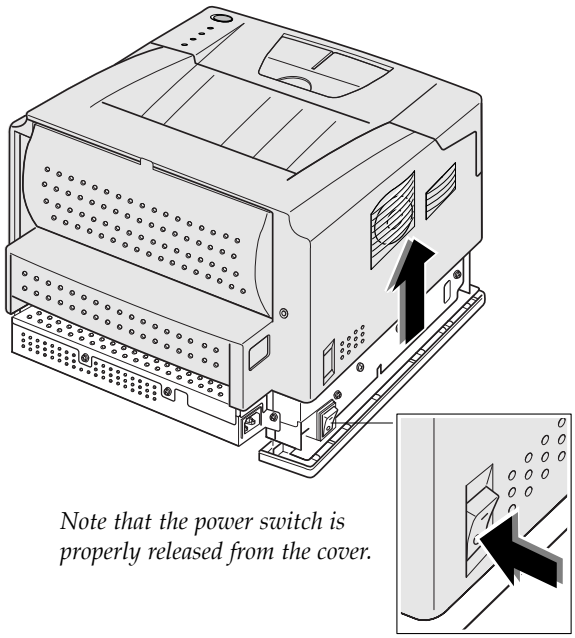

4-7 LSU

1. Before you remove the LSU, you should remove:

   -Controller Board (see page 4-3)
   -Main Cover (see page 4-6)

2. Remove two screws securing the fuser cover, and remove the fuser cover.

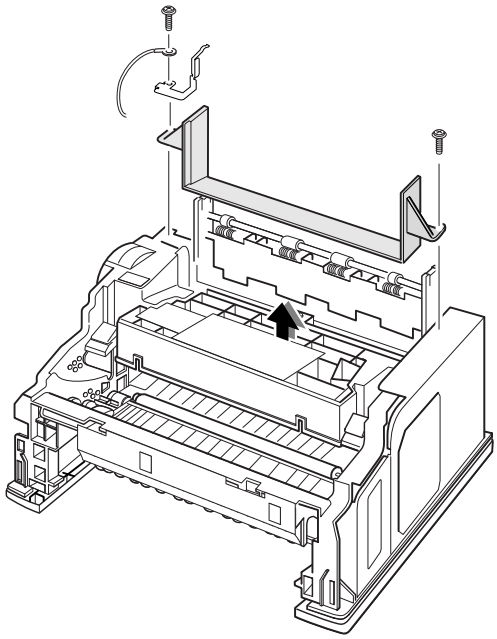

3. Remove three screws, and remove the LSU. Then unplug two connectors from the LSU.

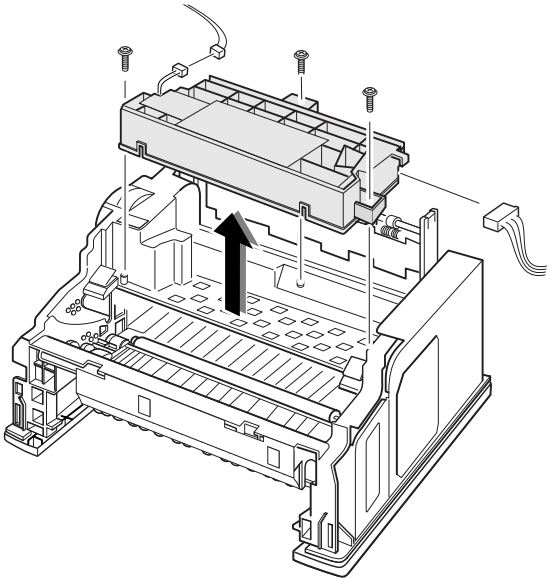

4-8 Exit Assembly

1. Before you remove the exit assembly, you should remove:

   -Controller Board (see page 4-3)
   -Main Cover (see page 4-6)
   -Fuser Cover (see page 4-10)

2. Remove three screws, and remove the bracket.

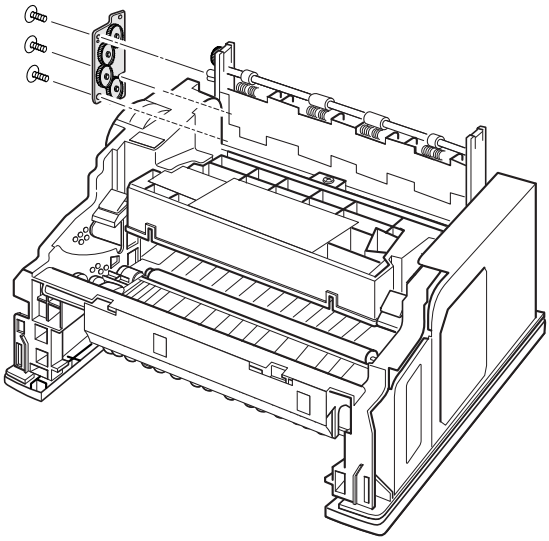

3. Remove two screws, unlatch the exit tray and take it out.

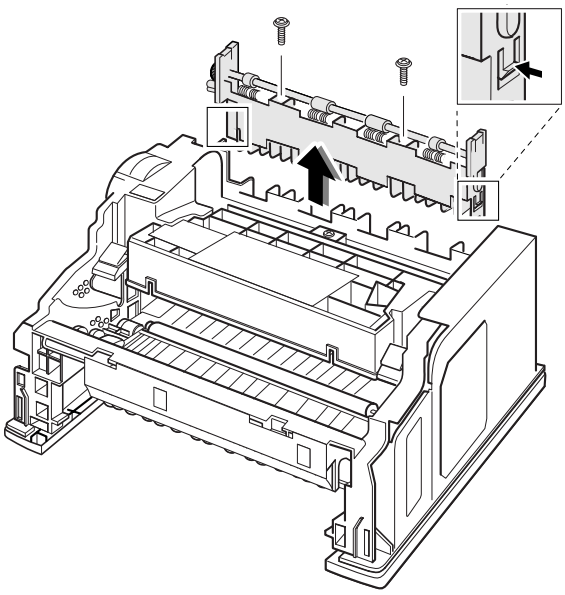

4. If you want to remove the roller shaft, unlatch both ends of the shaft and take it out.

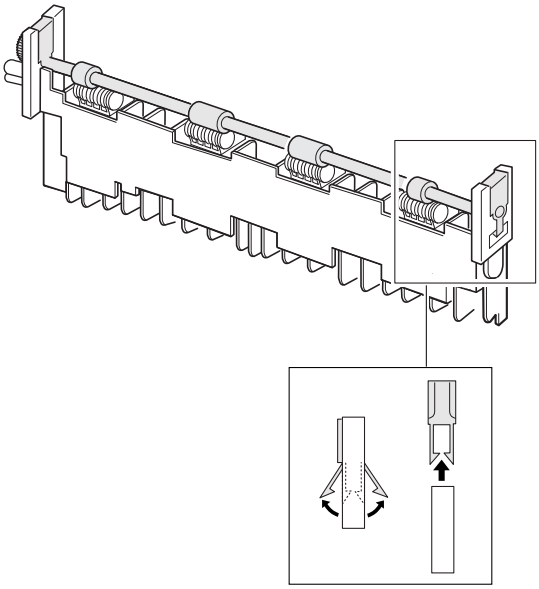

5. If you want to remove the exit rollers, sqeeze the bottom of roller and take it out.

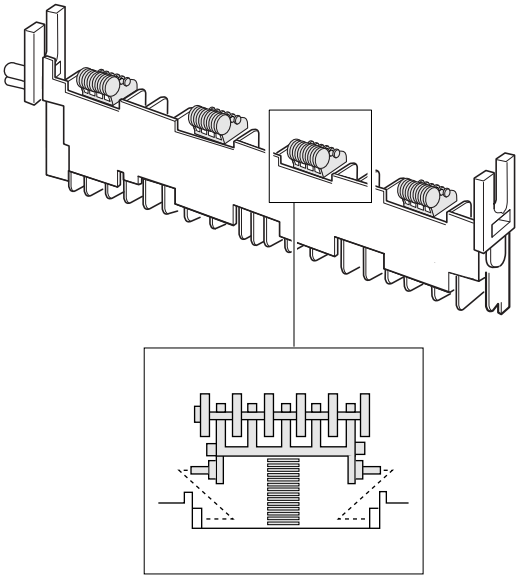

4-9 Drive Assembly and Fan

1. Before you remove the drive assembly or fan, you should remove:

   -Controller Board (see page 4-3)
   -Main Cover (see page 4-6)

2. Unplug two connectors.

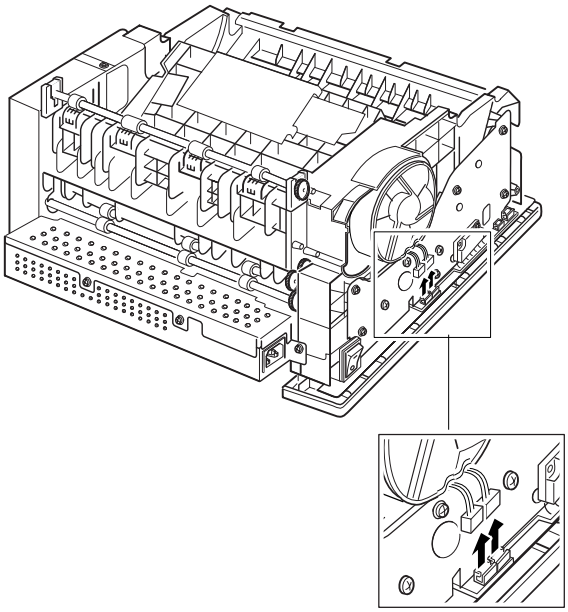

3. If you want to replace the fan, take the fan out.

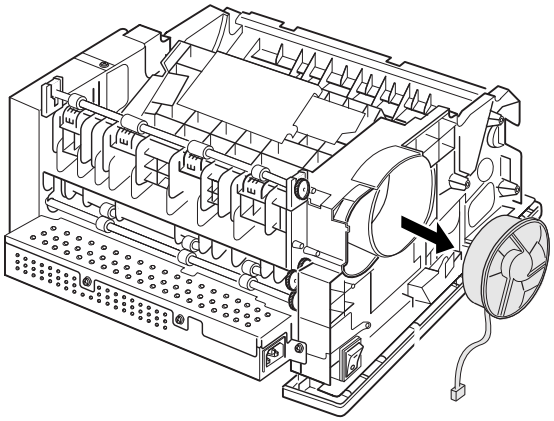

4. Remove seven screws securing the drive assembly from the gear bracket, and remove the drive assembly and motor drive board. Unplug one connector from the board.

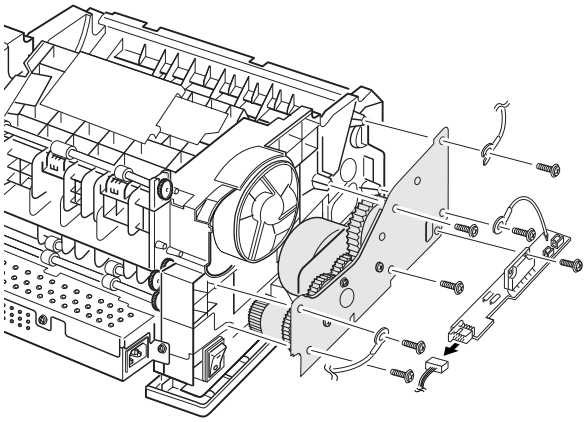

5. If you want to remove the motor from the drive assembly, remove three gold screws securing the motor assembly to the gear bracket.

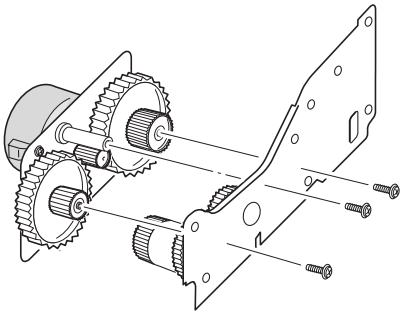

6. Remove the motor assembly. Remove two screws securing the motor to the motor bracket, then take the motor out.

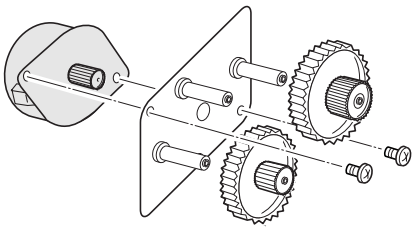

4-10 Fuser

1. Before you remove the fuser, you should remove:

   -Controller Board (see page 4-3)
   -Main Cover (see page 4-6)

2. Remove three screws, and remove the bracket.

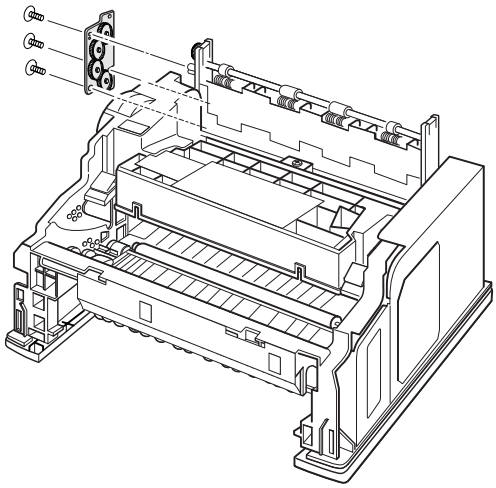

3. Remove two screws from the SMPS bracket.

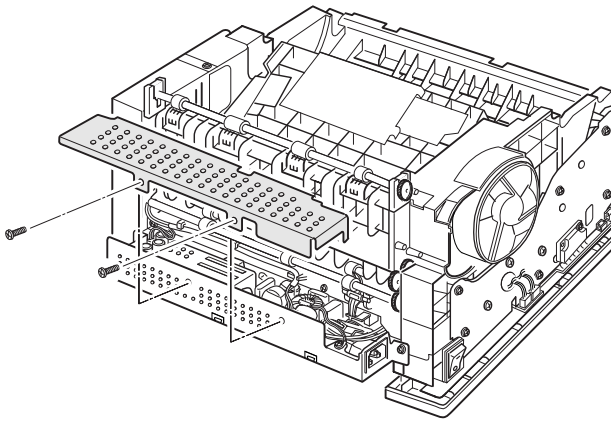

4. Remove the exit actuator. Unplug two connectors.

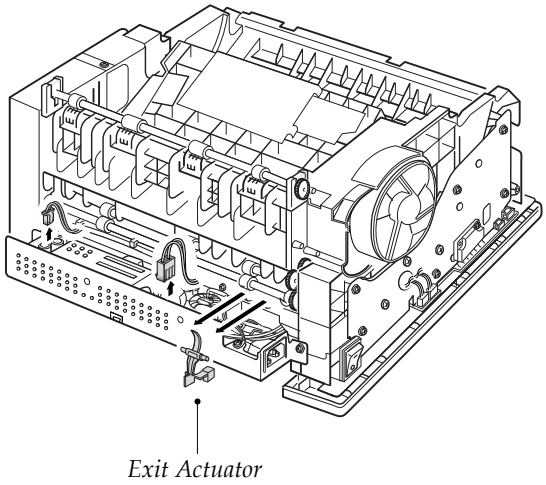

5. Remove four screws, and remove the fuser assembly.

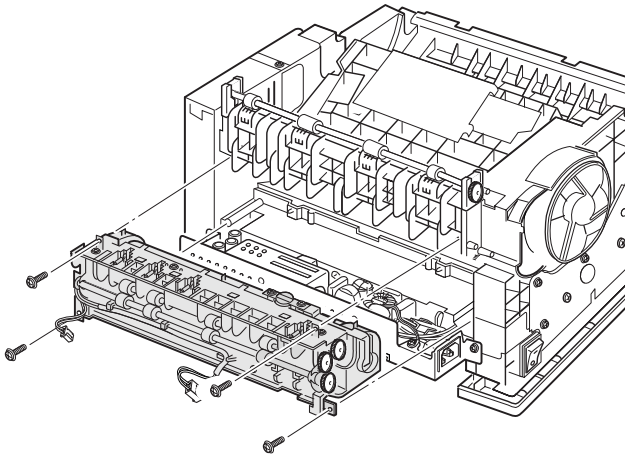

To remove the thermostat from the fuser assembly :

Remove two screws, and take the thermostat out.

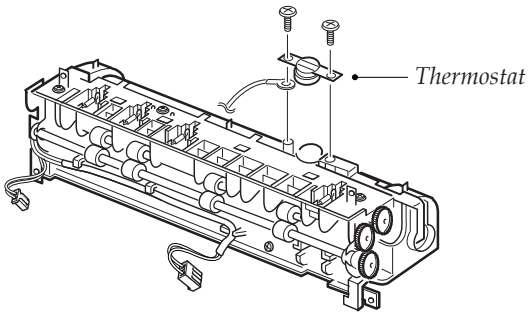

To remove the thermistor from the fuser assembly :

1. Release the wire from the three holders.

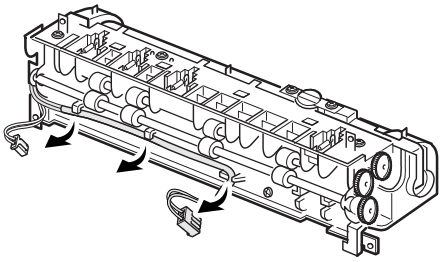

2. Remove one screw, then take the thermistor out.

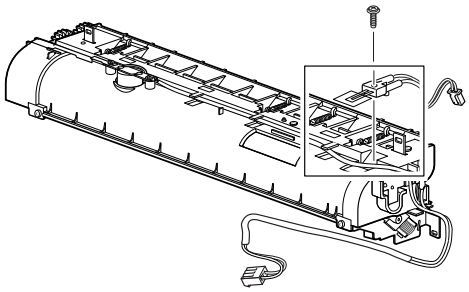

Note: When you reassemble the thermistor, make sure that it puts in place.

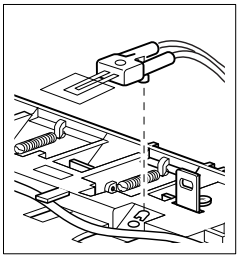

To remove the halogen lamp from the fuser assembly :

Remove one screw.

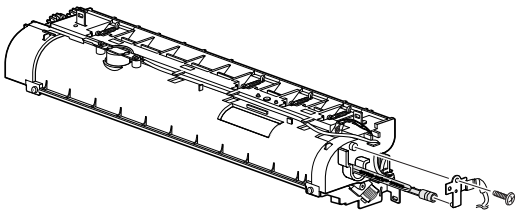

Note: When you reassemble the halogen lamp, make sure that it is inserted into the slot properly.

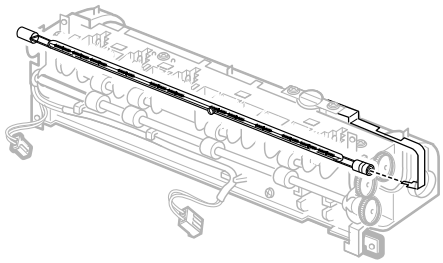

4-11 Engine Board and Miscellaneous

1. Before you remove the engine board, you should remove:

   -Controller Board (see page 4-3)
   -Main Cover (see page 4-6)

2. Remove the SMPS bracket as described in '4-10 Fuser' and unplug four connectors.

3. Remove one screw from the engine board.

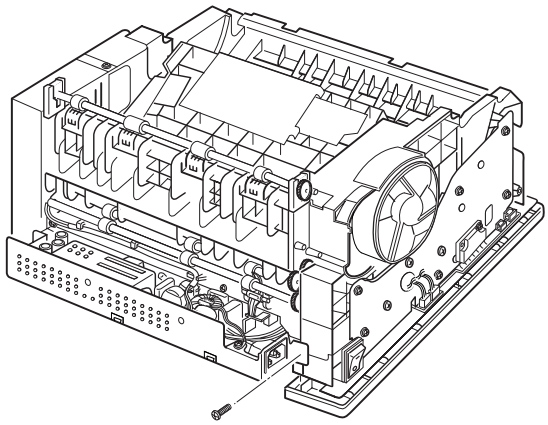

4. Turn the printer over. Remove six screws from the left and the right base brackets, and take them out.

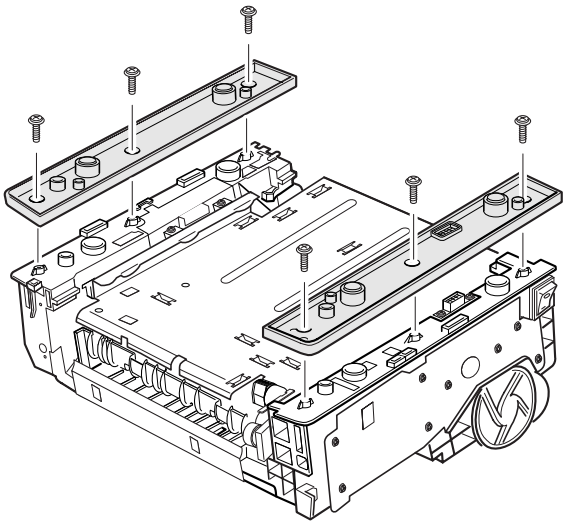

5. Remove three screws securing the ICU ground, and remove the ICU ground.

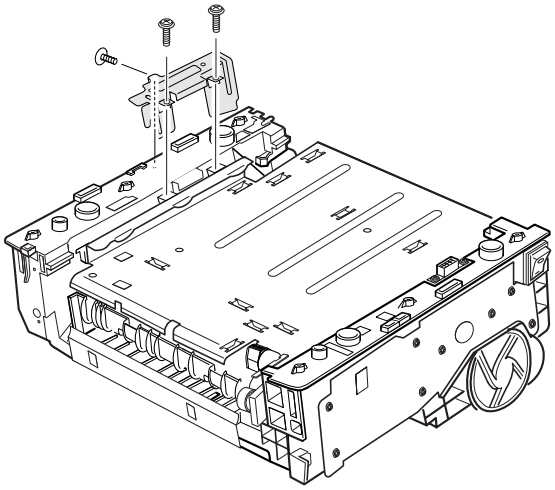

6. Remove one ground screw.

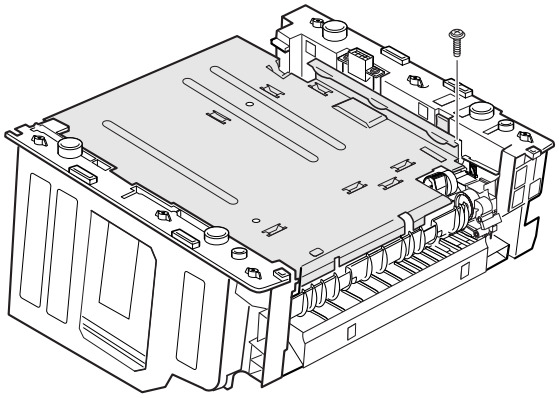

7. Remove six screws securing the PCU shield.

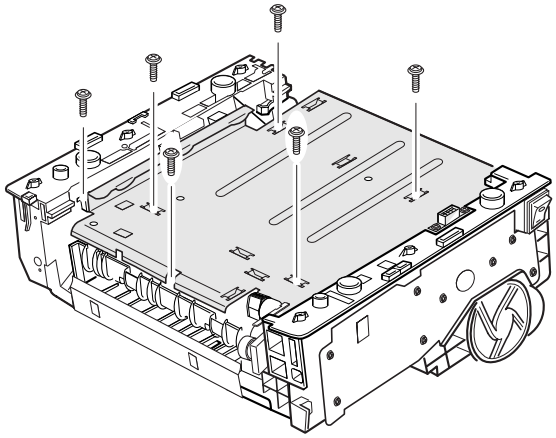

8. While you push the stopper to release the PCU shield, take the PCU shield out of the printer.

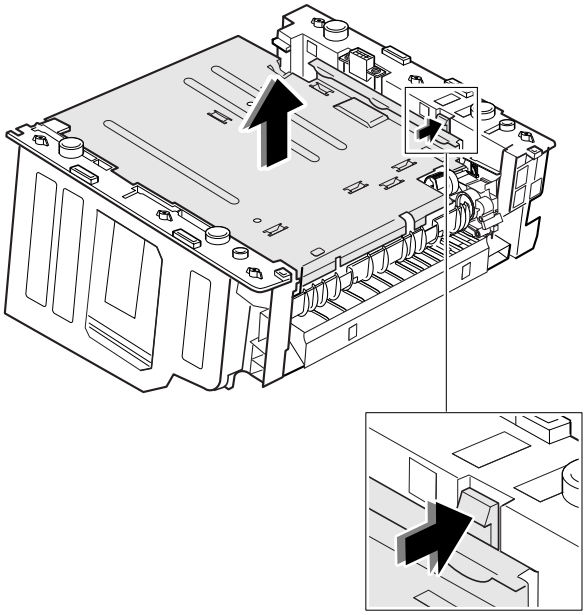

Stopper

9. Unplug all connectors from the PCU shield, and remove the shield.

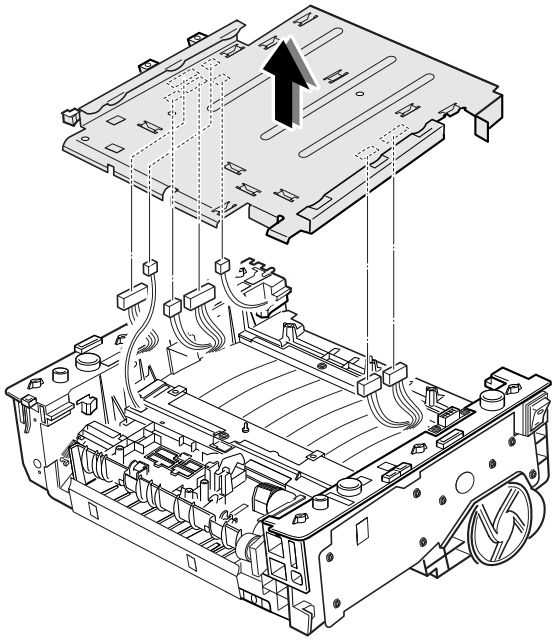

To replace HV terminals :

Remove the terminals.

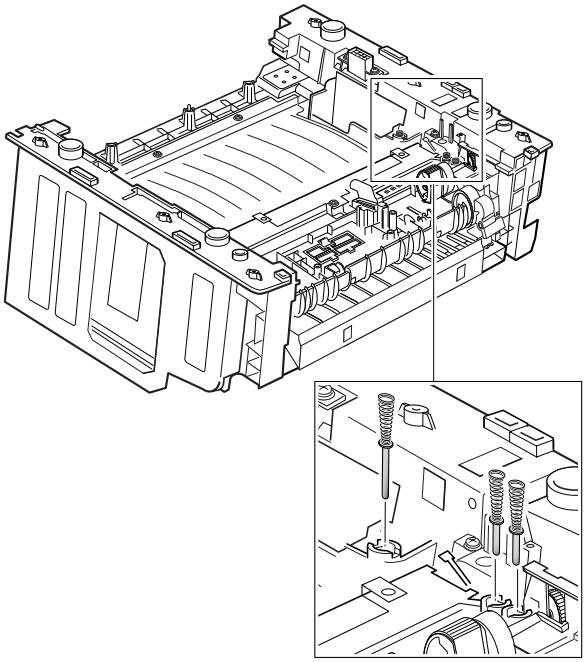

HV terminals

Note: When you replace with new ones, be careful that they are inserted in place.

To replace the SCF connector :

Remove two screws and take it out.

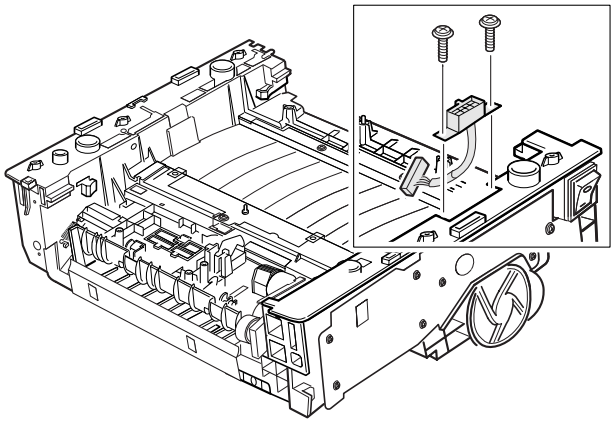

To replace the paper empty sensor :

Take the sensor out while you push the both ends of the sensor inward.

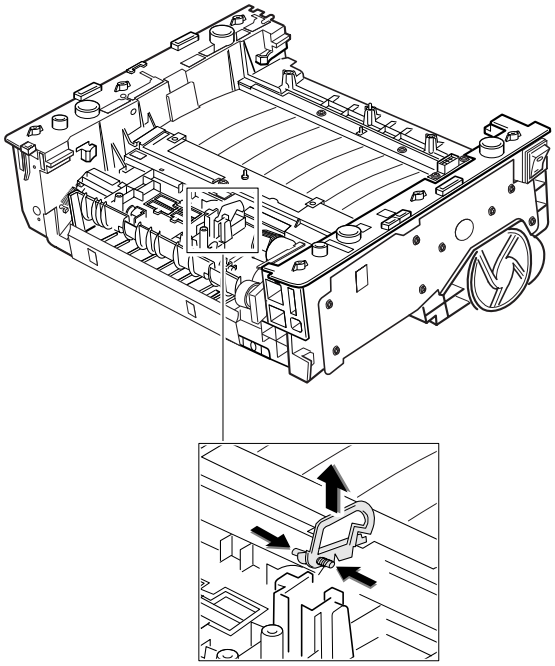

Paper empty sennsor

To replace the pickup sensor :

Take the sensor out while you push the both ends of the sensor.

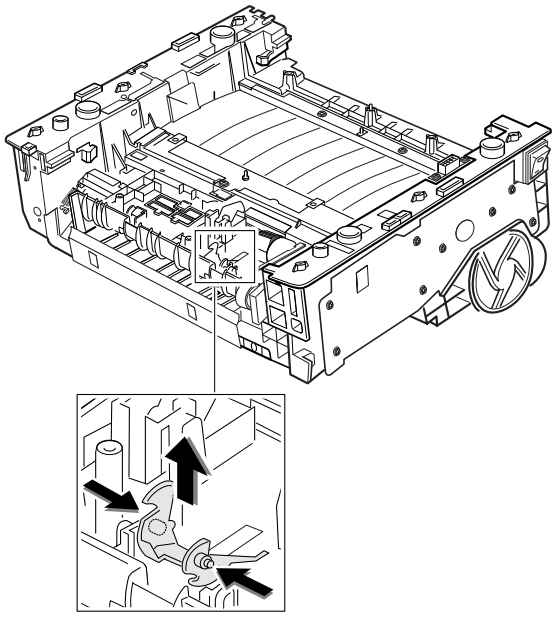

To replace the cover open sensor :

Remove the spring and take it out.

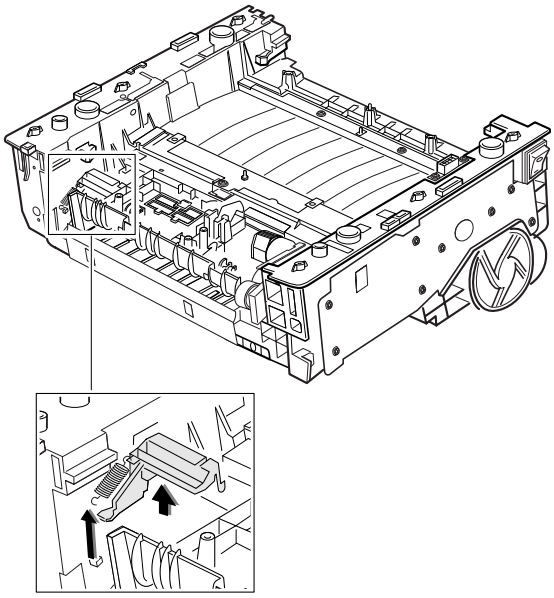

To replace the actuator :

1. Turn the mechanism back and push down the points as shown to unlatch the actuator.

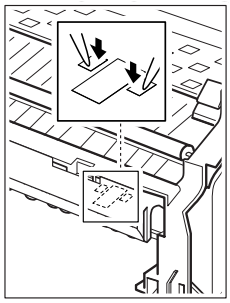

2. Turn the unit over, and remove the actuator.

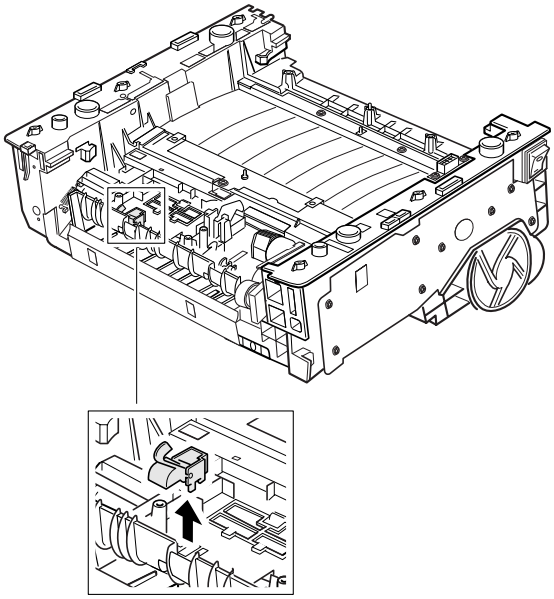

To remove the transfer guide :

Remove four screws and take the guide out.

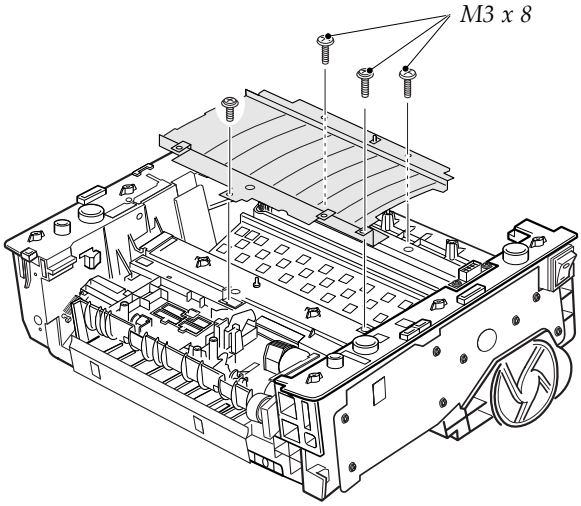

To replace the PTL module :

Release the three tabs latching the sensor using a phillips screwdriver, then push the sensor down.

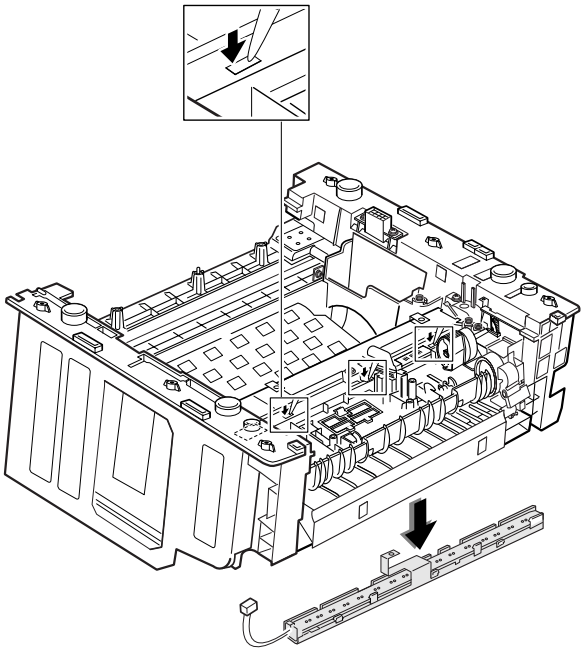

To replace the transfer roller bushings (left and right) :

Release each tab latching the left and right holder, then push the holder down.

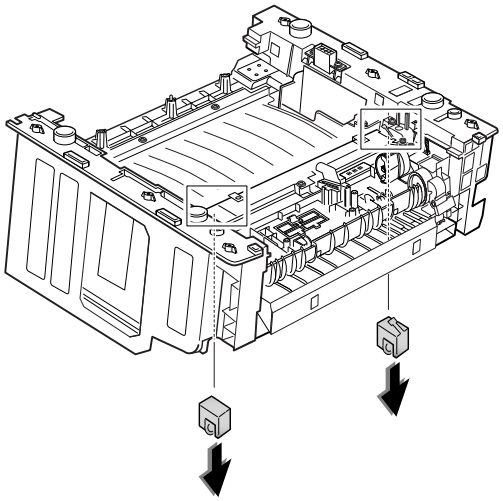

To replace the thermistor assembly :

Remove one screw, and remove the thermistor assembly.

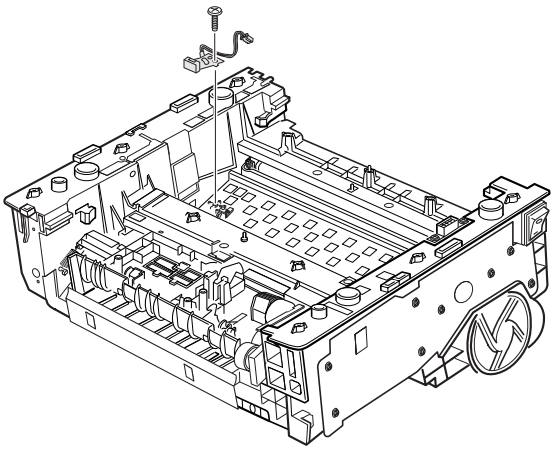

Note: When you reassemble the thermistor assembly, make sure that it puts in place.

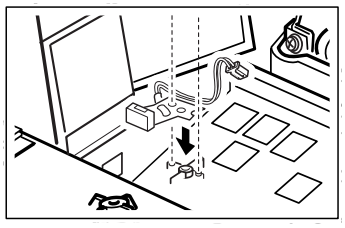

4-12 ROM

1. Press the cover open switch and raise the printer cover.

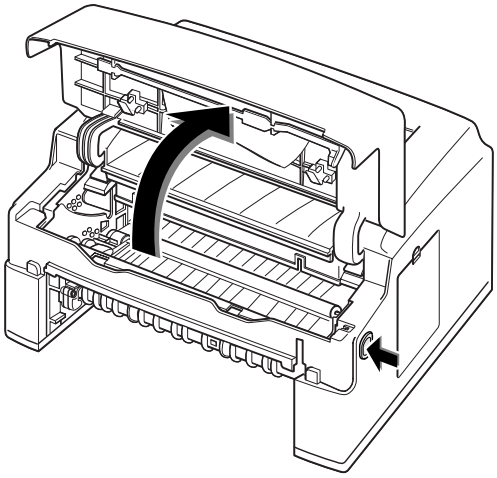

2. Remove the ROM cover.

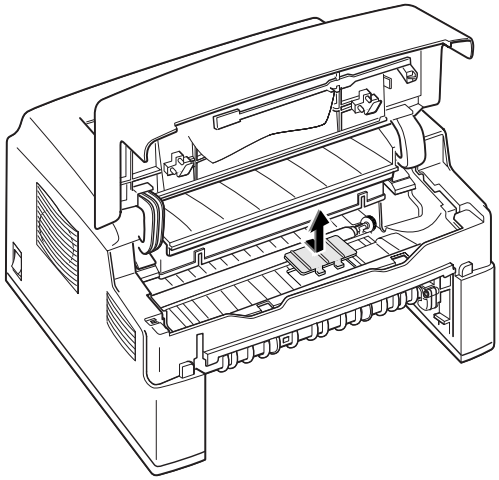

3. Replace ROM using the specified jig.

Note: When you install a new ROM, be careful for the direction.

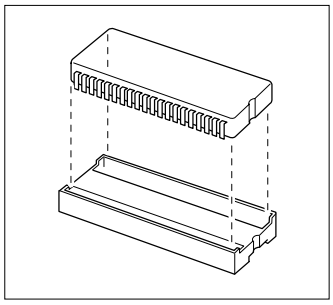

Memo